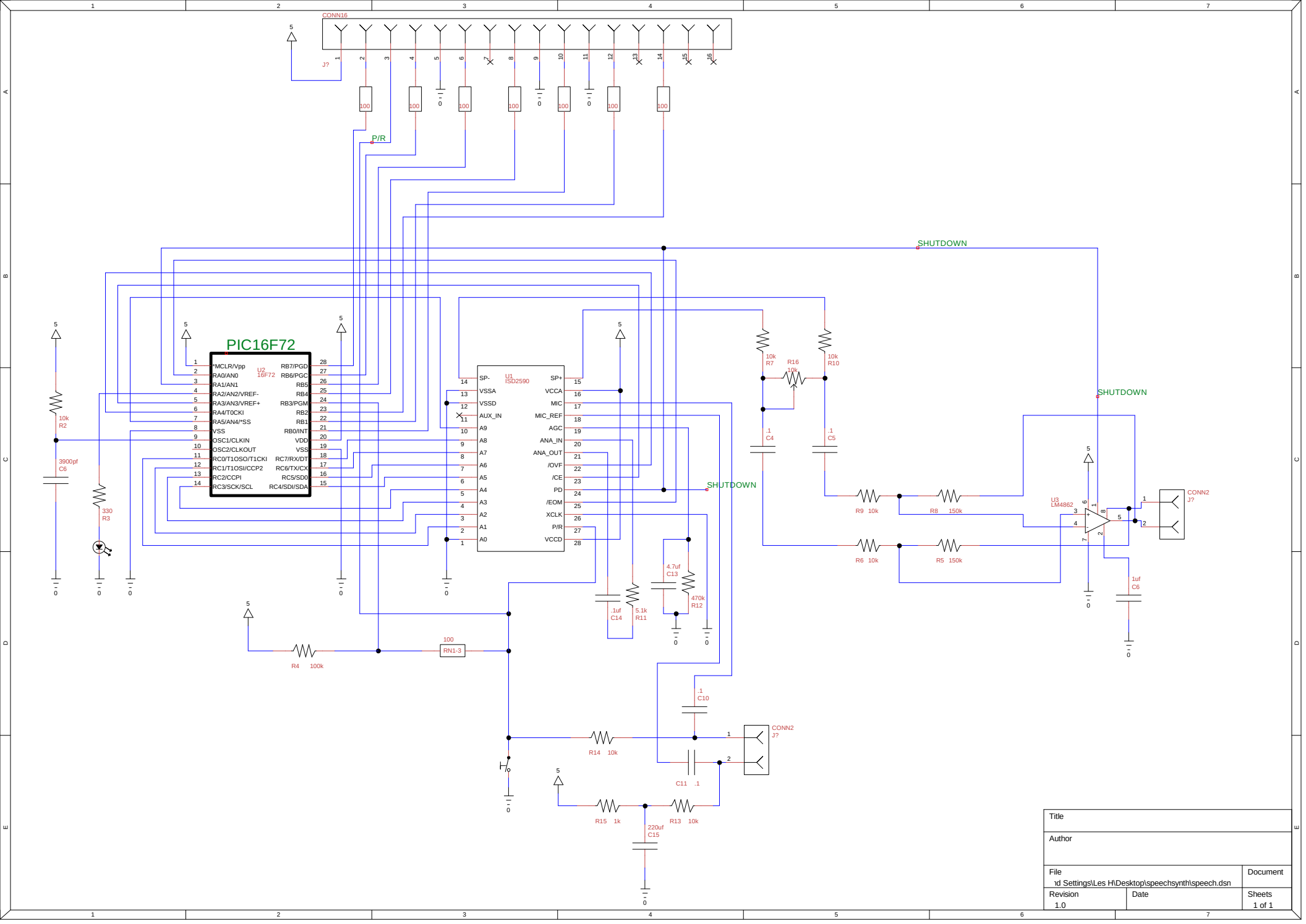

Title		
Author		
File ıd Settings\Les H\Desktop\speechsynth\speech.dsn		Document
Revision 1.0	Date	Sheets 1 of 1