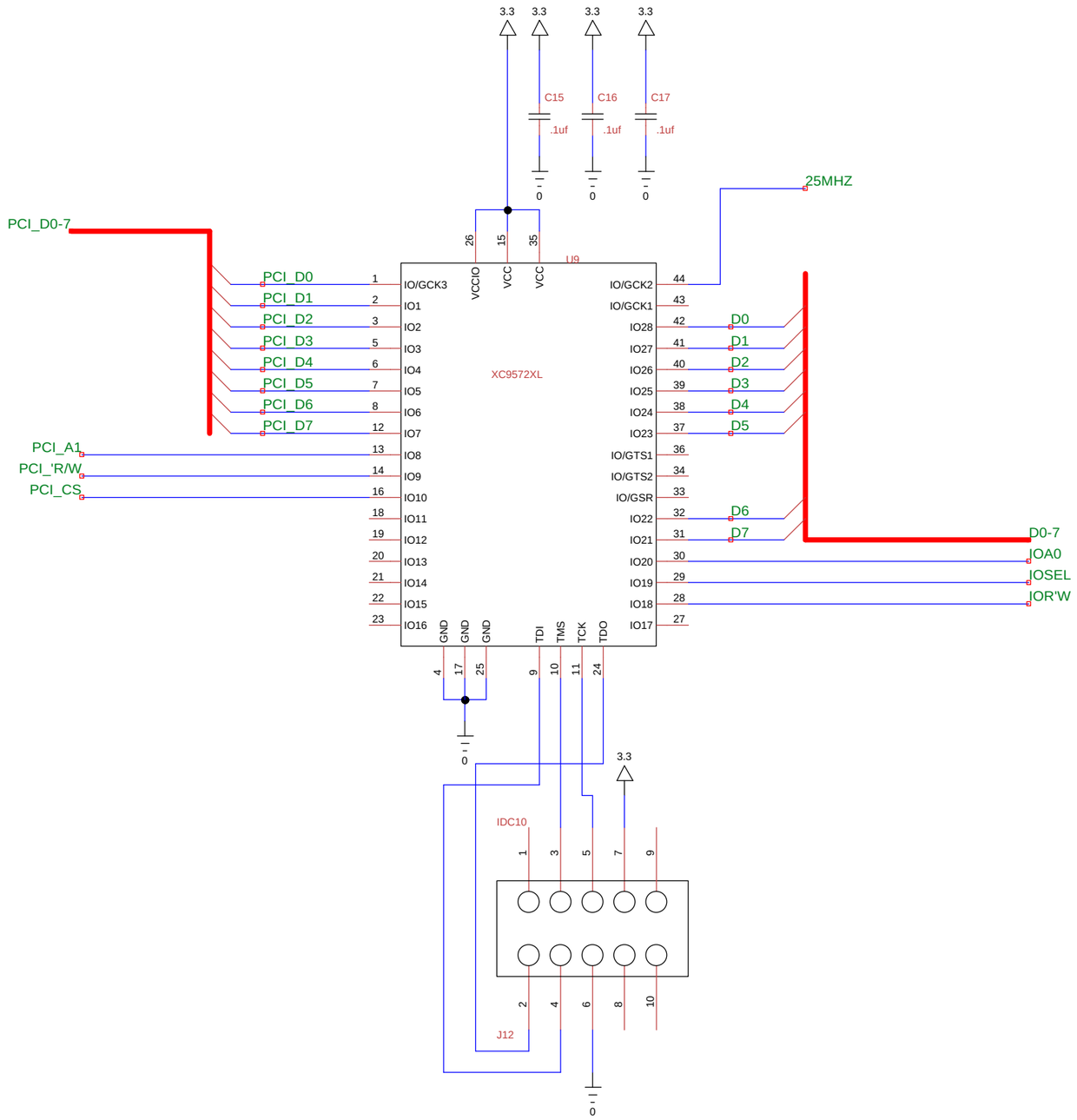

Title PCNIC		
Author Les Hildenbrandt Standard Parking Systems		
File E:\SPSUNIC\PCNIC2.dsn		Document
Revision 1.4B	Date 5/5/2007	Sheets 2 of 3