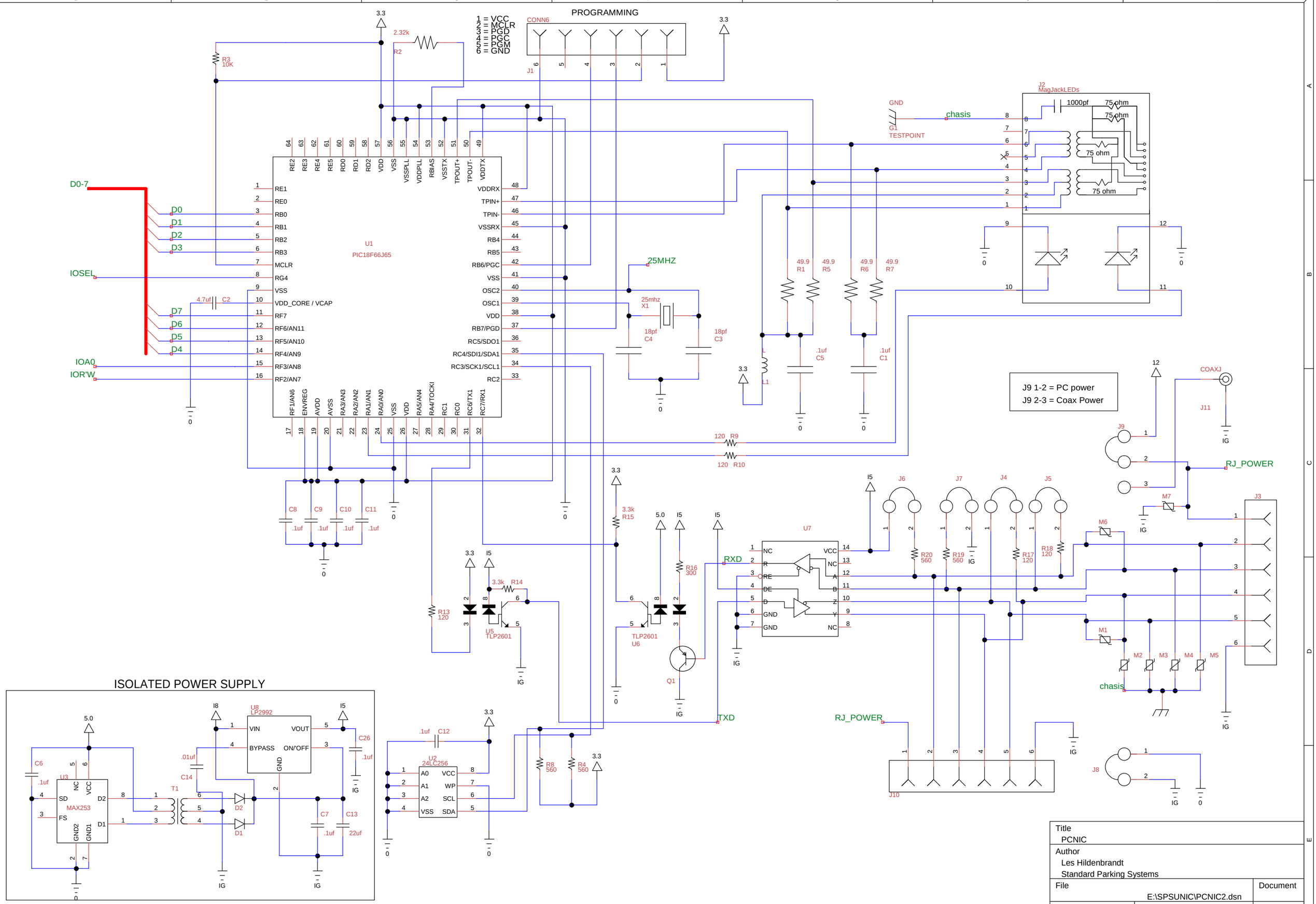
PROGRAMMING
1 = VCC
2 = MCLR
3 = PGD
4 = PGC
5 = PGM
6 = GND
CONN6
J1
U1
PIC18F66J65
D0-7
IOSEL
IOA0
IOR'W
25MHZ
25mhz
X1
J2
MagJackLEDs
GND
G1
TESTPOINT
chasis
J9 1-2 = PC power
J9 2-3 = Coax Power
COAXJ
J11
RJ_POWER
J3
J10
J8
U7
RXD
TXD
TLP2601
U5
U6
Q1
ISOLATED POWER SUPPLY
U8
LP2992
U3
MAX253
U2
24LC256
T1
Title
PCNIC
Author
Les Hildenbrandt
Standard Parking Systems
File
E:\SPSUNIC\PCNIC2.dsn
Document
Revision
1.4B
Date
5/5/2007
Sheets
1 of 3